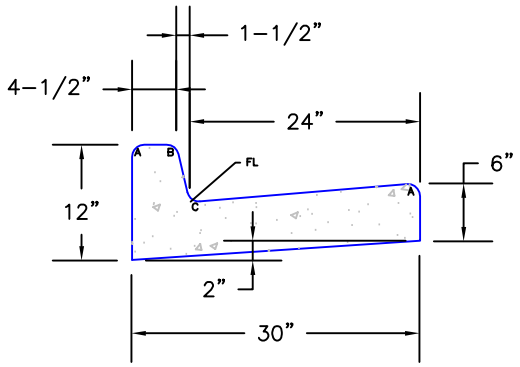


EPC TYPE A
(REVERSE SLOPE OF PAN FOR SPILL CURB)

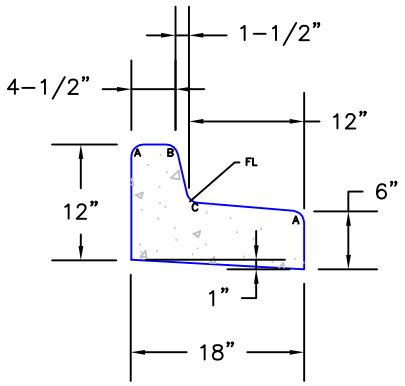


EPC TYPE B

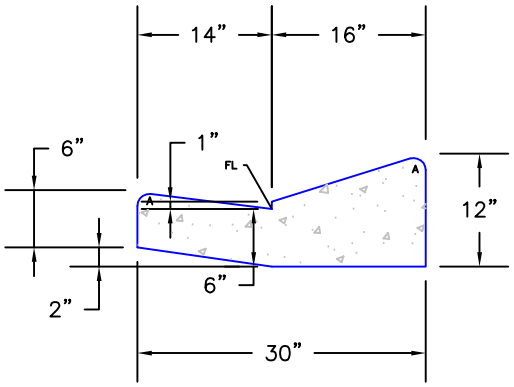


EPC TYPE C
(REVERSE SLOPE OF PAN FOR SPILL CURB)

| LEGEND FOR RADII | |
|---|---|
| A | 1/8" TO 1/4" |
| B | 1-1/2" |
| C | 1-1/2" TO 2" |

SCALE: NOT TO SCALE

| | | |
|---|---|---|
| 12/31/05<br>DATE APPROVED:<br><br>John A. McCarty<br>DEPARTMENT OF TRANSPORTATION | Typical Curb and Gutter Details<br>Standard Drawing | |
| | REVISION DATE: 12/22/05 | FILE NAME: SD_2-20 |

EL PASO COUNTY
DEPARTMENT OF TRANSPORTATION